A-13418

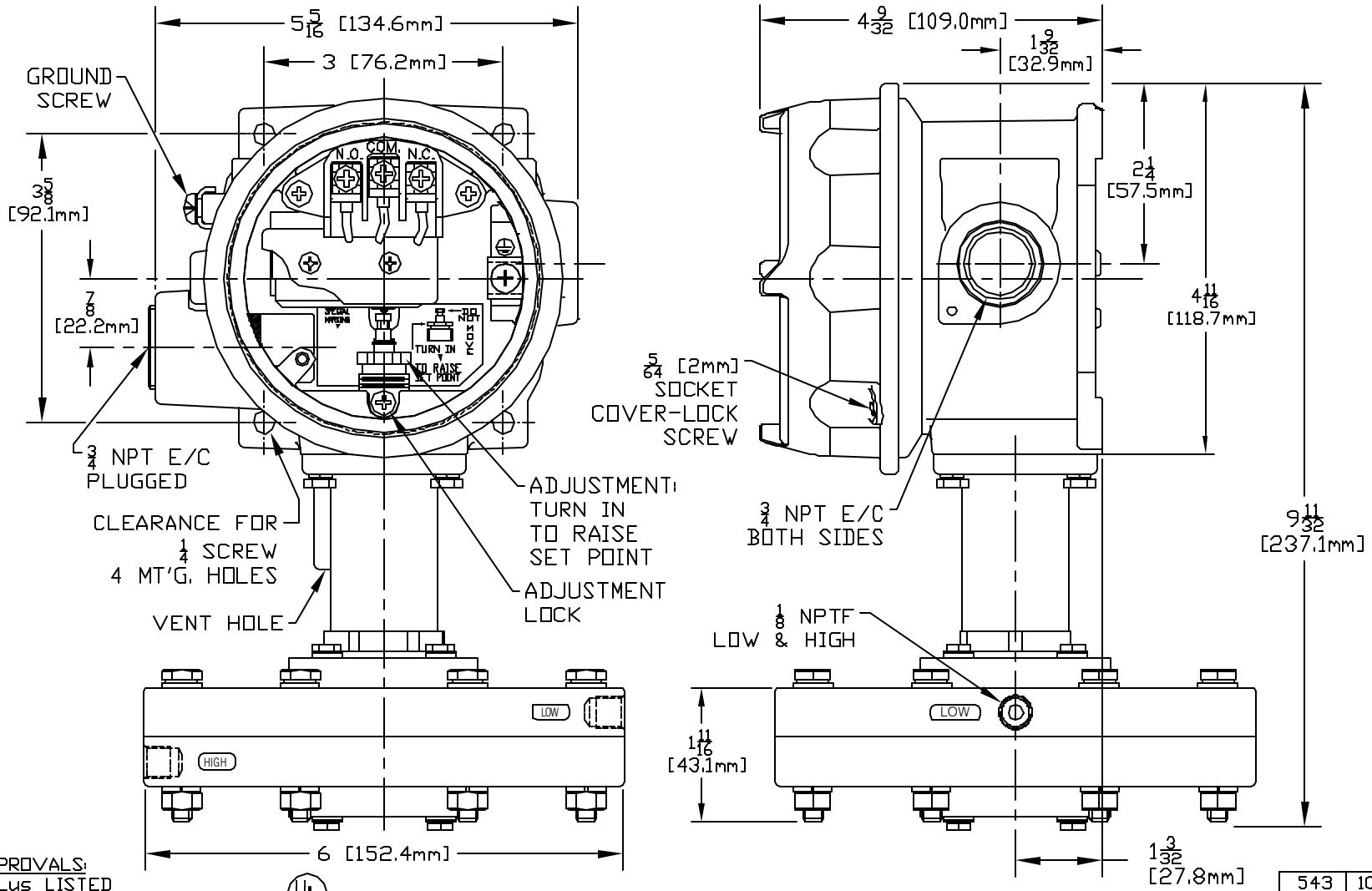

APPROVALS:
cULus LISTED
CLASS I, DIVISIONS 1 & 2, GROUPS B, C & D
CLASS II, DIVISIONS 1 & 2, GROUPS E, F & G
CLASS III
-50°C ≤ Tamb. ≤ +71°C
CLASS I, ZONE 1, GROUP IIB + H_2 T6
ENCLOSURE TYPE 4X, 7, 9

CE 0539 ATEX APPROVED
II 2 G/D EEx d IIC T6
-40°C ≤ Tamb. ≤ +71°C
IP66

CE COMPLIANT TO APPLICABLE DIRECTIVE(S)

I & M SHEET IMP120

MODEL NO.	'wcd ADJUSTABLE RANGE	mbar ADJUSTABLE RANGE
543	10 to 200	24.9 to 497.8
542	5 to 50	12.4 to 124.5
541	1 to 20	2.5 to 49.8
540	0.2 to 7	0.5 to 17.4

LOW END OF RANGE ON FALL
HIGH END OF RANGE ON RISE

SYM	DESCRIPTION	DATE	DWN	APPD
E	REPLACED CENELEC APPROVAL WITH ATEX APPROVAL. ECN#E0368	6-17-03	S.R.	LK
D	CHANGED kPa TO mbar ECN#E0053	10/7/02	AB	HN
C	ADDED CENELEC & CE APPROVALS. ECN#E0009	8-27-02	S.R.	LK
B	UPDATED ENCLOSURE & COVER. ECN#C9734	2/27/02	S.R.	LK
A	FIRST ISSUE. ECN# C7169	3-16-98	PLW	LK

REVISIONS

ORIGINAL DATE 3-16-98
DRWN PLW
CHKD AB
APPD L. KHATCHADOURIAN

UNLESS OTHERWISE SPECIFIED DIMENSIONS ARE IN INCHES

DO NOT SCALE THIS DRAWING

TITLE
J120K
540 TO 543

SCALE 1:2

UNITED ELECTRIC CONTROLS COMPANY
WATERTOWN * MASSACHUSETTS

DF001
REV. B

DWG NO
A-13418