A-12295

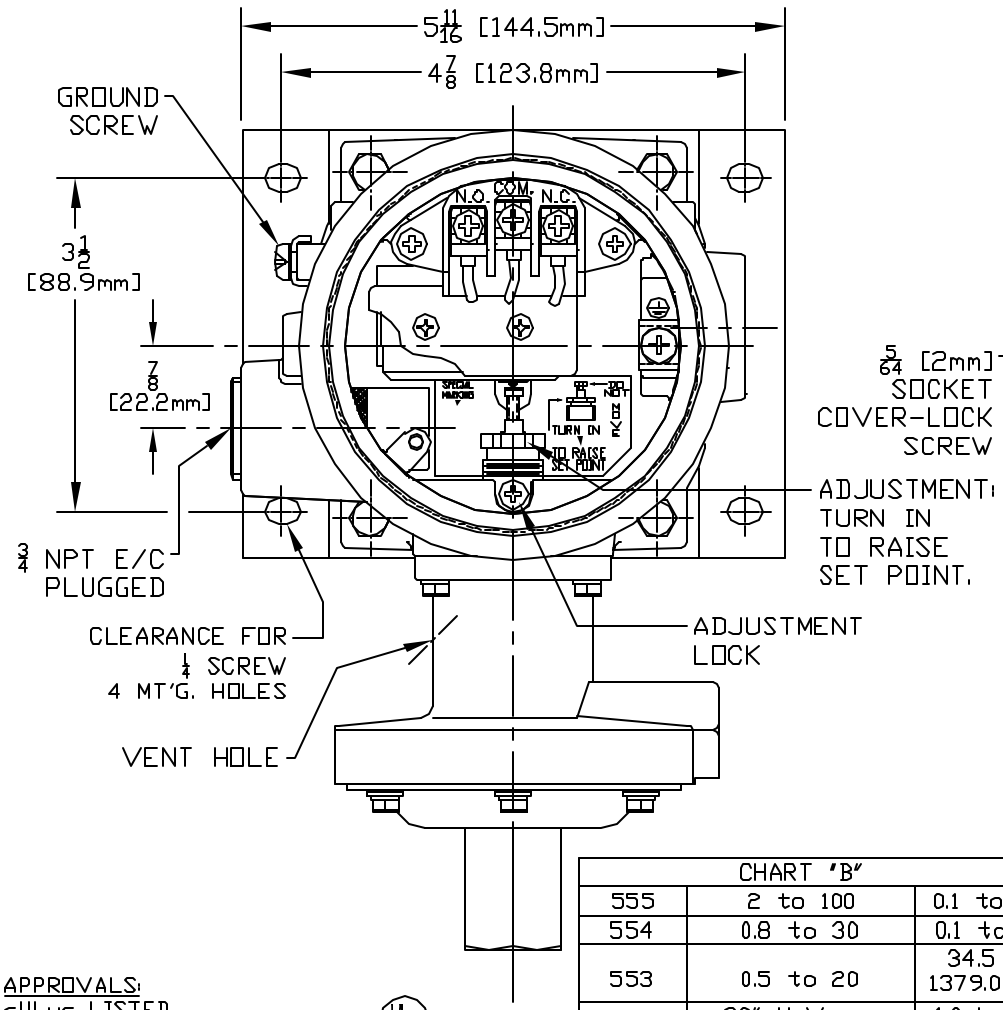


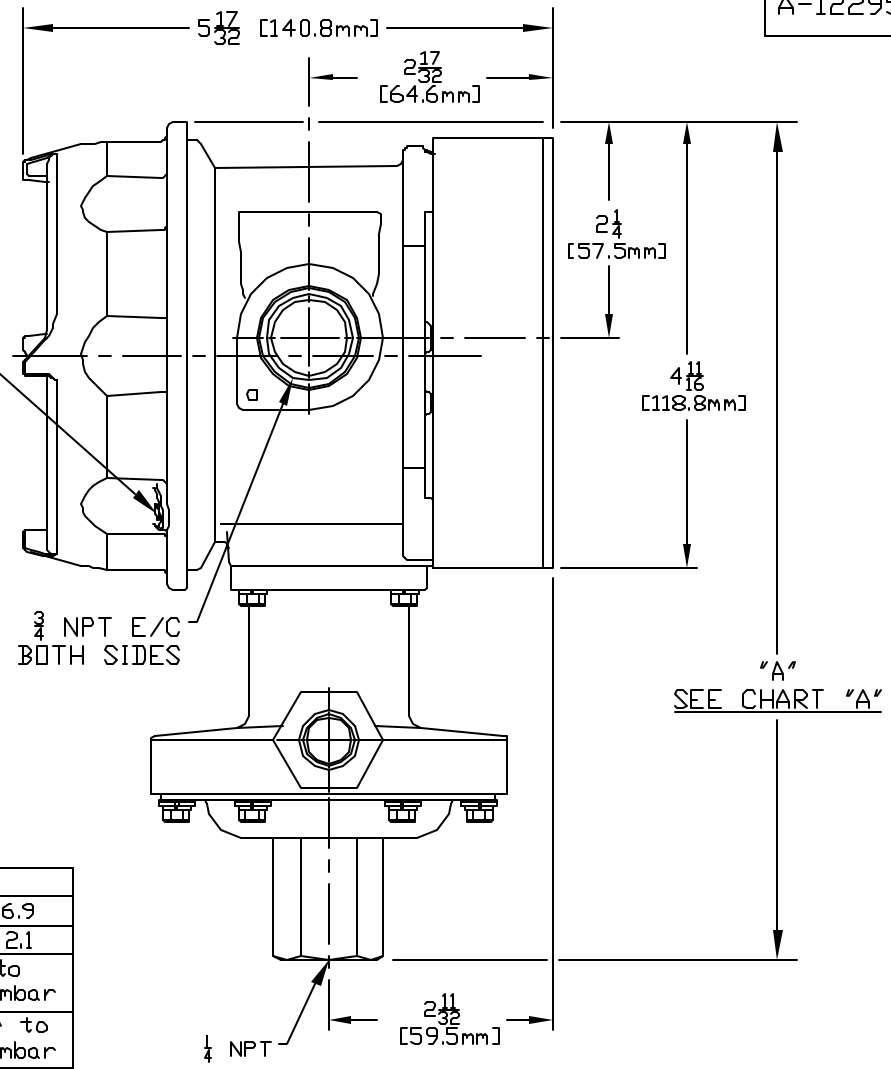


| CHART "B" | | |
|---|---|---|
| 555 | 2 to 100 | 0.1 to 6.9 |
| 554 | 0.8 to 30 | 0.1 to 2.1 |
| 553 | 0.5 to 20 | 34.5 to 1379.0 mbar |
| 552 | 30" HgVac to 20 psi | -1.0 bar to 1379.0 mbar |
| 551 | 2.0 to 80" W.C. | 5.0 to 199.1 mbar |
| 550 | 30" to 3"HgVac | -1.0 to -0.1 |
| MODEL NO. | psi | bar |
| | ADJUSTABLE RANGE | |
| | LOW END OF RANGE ON FALL<br>HIGH END OF RANGE ON RISE | |

| CHART "A" | |
|---|---|
| 551 & 553-555 | 8 11/32 [211.7mm] |
| 550 & 552 | 8 13/16 [223.6mm] |
| MODEL NO | DIM "A" |

APPROVALS:
cULus LISTED
CLASS I, DIVISIONS 1 & 2, GROUPS B, C & D
CLASS II, DIVISIONS 1 & 2, GROUPS E, F & G
CLASS III
-50°C ≤ Tamb. ≤ +71°C
CLASS I, ZONE 1, GROUP IIB + $H_2$ T6
ENCLOSURE TYPE 4X, 7, 9

CE 0539 ATEX APPROVED
II 2 G/D EEx d IIC T6
-40°C ≤ Tamb. ≤ +71°C
IP66

CE COMPLIANT TO APPLICABLE DIRECTIVE(S)

I & M SHEET IMP120

| SYM | DESCRIPTION | DATE | DWN | APPD |
|---|---|---|---|---|
| U | REPLACED CENELEC APPROVAL WITH ATEX APPROVAL. ECN#E0368 | 6-17-03 | S.R. | LK |
| T | REDRAWN, CHANGED kPa TO bar ECN#E0053 | 10/7/02 | AB | HN |

REVISIONS

| | |
|---|---|
| ORIGINAL DATE | 10-17-86 |
| DRWN | S. ROBAK |
| CHKD | A.J. FLECCA |
| APPD | A. MINASSIAN |

UNLESS OTHERWISE SPECIFIED DIMENSIONS ARE IN INCHES

DO NOT SCALE THIS DRAWING

TITLE
J120
550-555

SCALE 1:2

DF001
REV. B

UNITED ELECTRIC CONTROLS COMPANY
WATERTOWN * MASSACHUSETTS

DWG NO
A-12295