A-12146

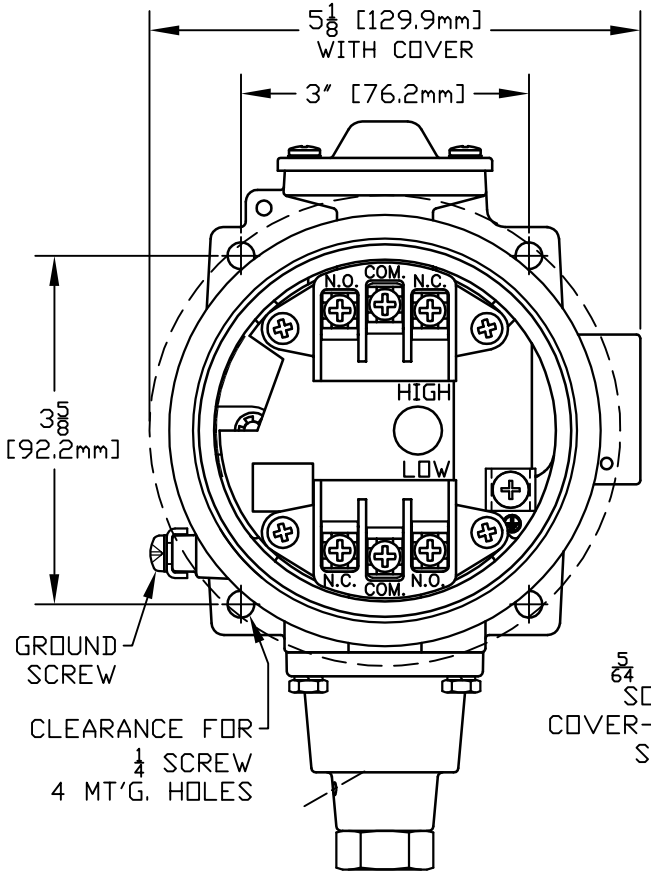

COVER REMOVED
IN FRONT VIEW

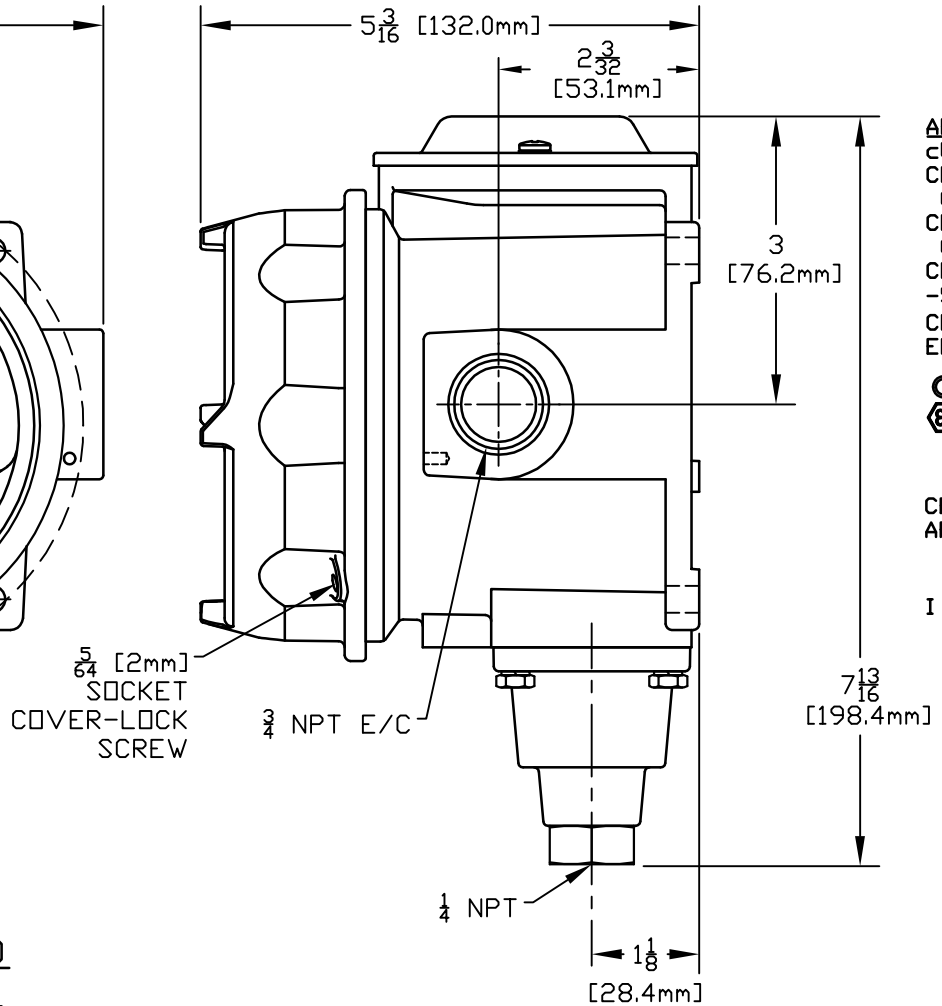

APPROVALS:
cULus LISTED
CLASS I, DIVISIONS 1 & 2,
GROUPS B, C & D
CLASS II, DIVISIONS 1 & 2,
GROUPS E, F & G
CLASS III
-50°C ≤ Tamb. ≤ +71°C
CLASS I, ZONE 1, GROUP IIB + H_2 T6
ENCLOSURE TYPE 4X, 7, 9

CE 0539 ATEX APPROVED
Ex II 2 G/D EEx d IIC T6
-40°C ≤ Tamb. ≤ +71°C
IP66

CE COMPLIANT TO
APPLICABLE DIRECTIVE(S)

I & M SHEET IMP120

MODEL NO.	ADJUSTABLE RANGE psi	ADJUSTABLE RANGE bar
376	0 to 500	0 to 34.5
361	0 to 300	0 to 20.7
358	0 to 200	0 to 13.8

LOW END OF RANGE ON FALL
HIGH END OF RANGE ON RISE

SYM	DESCRIPTION	DATE	DWN	APPD
V	UPDATED ENCLOSURE. ECN#E4345.	2-17-12	RCI	SJM
U	REPLACED CENELEC APPROVAL WITH ATEX APPROVAL. ECN#E0368	6-17-03	S.R.	LK
T	CHANGED kPa TO bar ECN#E0053	10/7/02	AB	HN
S	ADDED CENELEC & CE APPROVALS. ECN#E0009	8-27-02	S.R.	LK
R	UPDATED ENCLOSURE & COVER. ECN#C9734	3-26-02	S.R.	LK
P	REVISED PER REDESIGN. ECN#C6025	11-21-96	S.R.	JJM

REVISIONS

ORIGINAL DATE 7-29-86
DRWN PETER WEILER
CHKD N.MacKAY JR.
APPD A.MINASSIAN

UNLESS OTHERWISE SPECIFIED DIMENSIONS ARE IN INCHES

DO NOT SCALE THIS DRAWING

TITLE
H122
358, 361
& 376

SCALE 1:2

UE
DF001
REV. C
UNITED ELECTRIC
CONTROLS COMPANY
WATERTOWN * MASSACHUSETTS

DWG NO
A-12146