A-13419

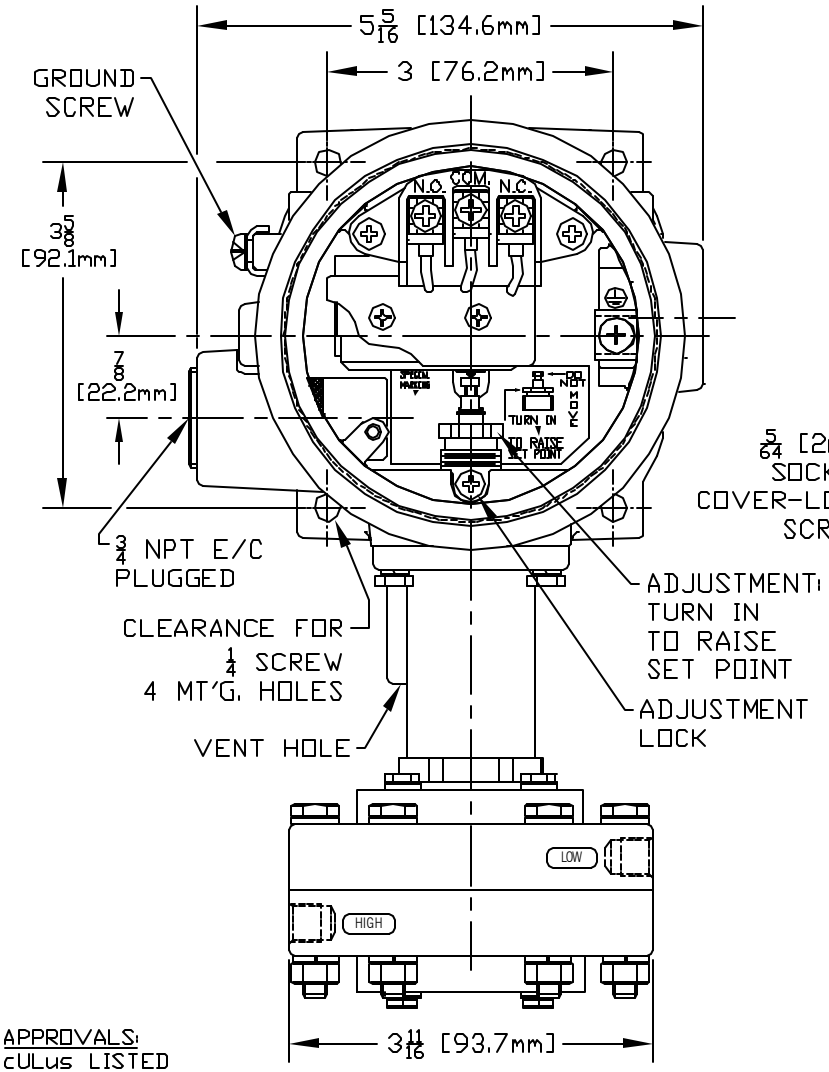

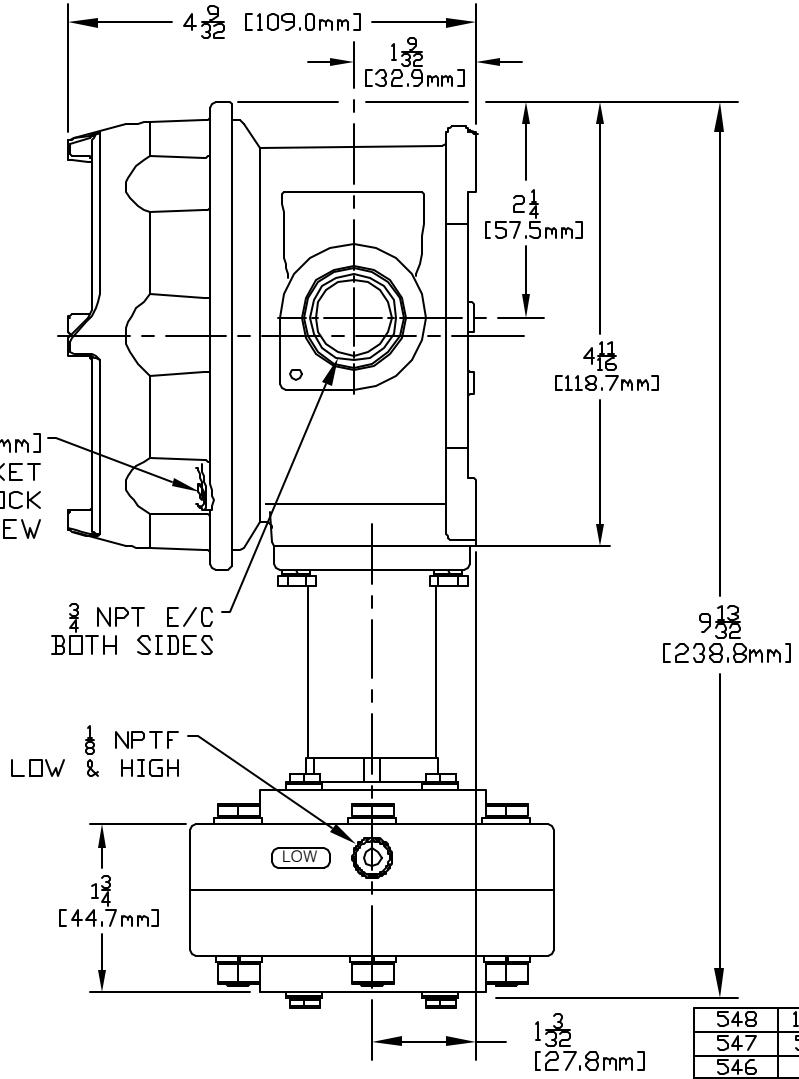

MODEL NO.	ADJUSTABLE RANGE psid	ADJUSTABLE RANGE bar
548	100 to 500	6.9 to 34.5
547	50 to 250	3.4 to 17.2
546	10 to 125	0.7 to 8.6
545	5 to 50	0.3 to 3.4
544	2 to 20	137.9 to 1379.0 mbar

LOW END OF RANGE ON FALL
HIGH END OF RANGE ON RISE

APPROVALS:
cULus LISTED
CLASS I, DIVISIONS 1 & 2, GROUPS B, C & D
CLASS II, DIVISIONS 1 & 2, GROUPS E, F & G
CLASS III
-50°C ≤ Tamb. ≤ +71°C
CLASS I, ZONE 1, GROUP IIB + H_2 T6
ENCLOSURE TYPE 4X, 7, 9

CE 0539 ATEX APPROVED
II 2 G/D EEx d IIC T6
-40°C ≤ Tamb. ≤ +71°C
IP66

CE COMPLIANT TO APPLICABLE DIRECTIVE(S)

I & M SHEET IMP120

SYM	DESCRIPTION	DATE	DWN	APPD
E	REPLACED CENELEC APPROVAL WITH ATEX APPROVAL. ECN#E0368	6-17-03	S.R.	LK
D	CHANGED kPa TO bar ECN#E0053	10/7/02	AB	HN
C	ADDED CENELEC & CE APPROVALS. ECN#E0009	8-27-02	S.R.	LK
B	UPDATED ENCLOSURE & COVER. ECN#C9734	2/27/02	S.R.	LK
A	FIRST ISSUE. ECN# C7169	3-16-98	PLW	LK

REVISIONS

ORIGINAL DATE 3-16-98
DRWN PLW
CHKD AB
APPD L. KHATCHADOURIAN

UNLESS OTHERWISE SPECIFIED DIMENSIONS ARE IN INCHES

DO NOT SCALE THIS DRAWING

TITLE
J120K
544 TO 548

SCALE 1:2

UE
UNITED ELECTRIC CONTROLS COMPANY
WATERTOWN * MASSACHUSETTS

DF001
REV. B

DWG NO
A-13419